University of Notre Dame
Aerospace and Mechanical Engineering

ME 469: Introduction to Robotics
Homework 2 Solutions

B. Goodwine
Spring 1999

1. This is simply Equation 3.6 implemented in Mathematica:

```
T[alph_, a_, d_, th_] :=
  {{Cos[th], -Sin[th], 0, a},
    {Sin[th]*Cos[alph], Cos[th]*Cos[alph], -Sin[alph], -Sin[alph]*d},
    {Sin[th]*Sin[alph], Cos[th]*Sin[alph], Cos[alph], Cos[alph]*d},
    {0, 0, 0, 1}}
```

   Can be used, for example, as

```
T[Pi/2,0,0,theta] //MatrixForm
```

   which will print out transformation with those parameter values in a nice matrix form in the Mathematica notebook.

2. (Craig, 3.4)
   Following the usual rules for affixing frames to manipulators results in the frames illustrated in Figure 1.

   Consulting the figure, the following link parameters are apparent:

i	α_{i-1}	a_{i-1}	d_i	θ_i
1	0	0	0	θ_1
2	$\frac{\pi}{2}$	0	0	θ_2
3	0	L_3	0	θ_3

   Determining ${}^0_1T$,${}^1_2T$ and ${}^2_3T$ is now a simple matter of substituting these values into Equation 3.6, or, even simpler, using the Mathematica function from Problem 1.

$$ {}^0_1T = \begin{bmatrix} \cos\theta_1 & -\sin\theta_1 & 0 & 0 \\ \sin\theta_1 & \cos\theta_1 & 0 & 0 \\ 0 & 0 & 1 & 0 \\ 0 & 0 & 0 & 1 \end{bmatrix} $$

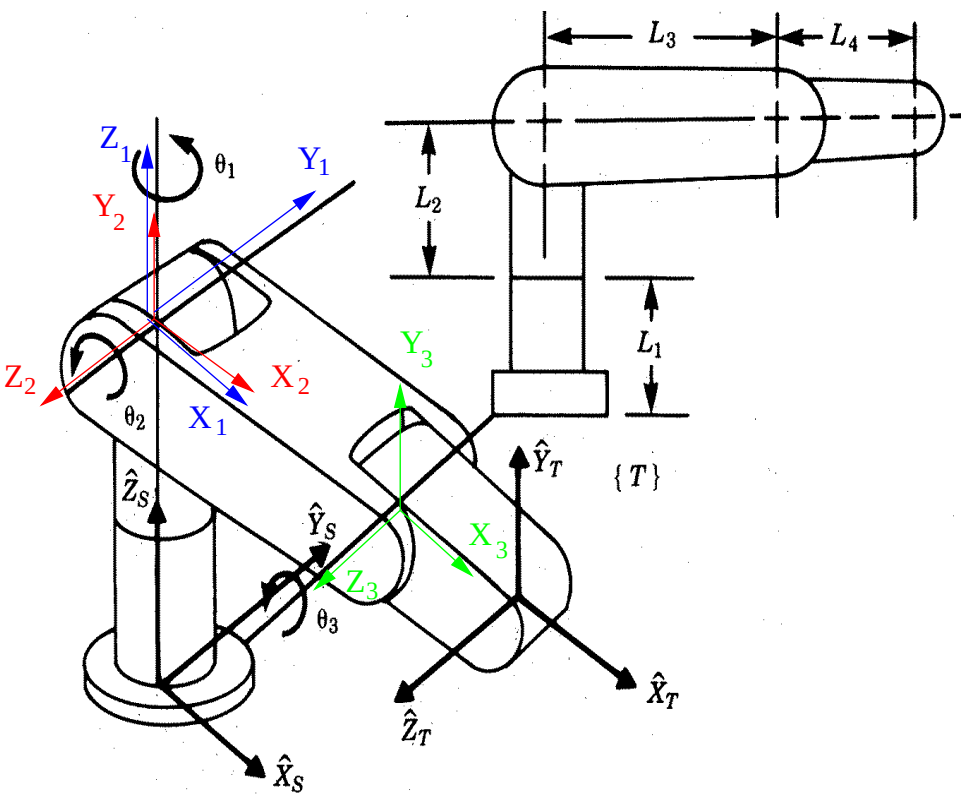

Figure 1. Frames for problem 2.

$$
{}^1_2T = \begin{bmatrix} \cos\theta_2 & -\sin\theta_2 & 0 & 0 \\ 0 & 0 & -1 & 0 \\ \sin\theta_2 & \cos\theta_2 & 0 & 0 \\ 0 & 0 & 0 & 1 \end{bmatrix}
$$

$$
{}^2_3T = \begin{bmatrix} \cos\theta_3 & -\sin\theta_3 & 0 & L_3 \\ \sin\theta_3 & \cos\theta_3 & 0 & 0 \\ 0 & 0 & 1 & 0 \\ 0 & 0 & 0 & 1 \end{bmatrix}
$$

3. (Craig, 3.9)
   We were given ${}^0_2T$, and want to find the location of the tip in fram 0.

   Clearly,
$$
{}^0P_{\text{tip}} = {}^0_2T \quad {}^2P_{\text{tip}},
$$
   where
$$
{}^2P_{\text{tip}} = \begin{bmatrix} l_2 \\ 0 \\ 0 \end{bmatrix},
$$
   or
$$
\boxed{{}^0P_{\text{tip}} = \begin{bmatrix} l_2\cos\theta_1\cos\theta_2 + l_1\cos\theta_1 \\ l_2\sin\theta_1\cos\theta_2 + l_1\sin\theta_1 \\ l_2\sin\theta_2 \end{bmatrix}.}
$$

4. (Craig, 3.17)
   Following the usual rules for affixing frames to manipulators results in the frames illustrated in Figure 2.

   Consulting the figure, and naming the distance a_2, the following link parameters are apparent:

i	α_{i-1}	a_{i-1}	d_i	θ_i
1	0	0	0	θ_1
2	$\frac{\pi}{2}$	0	0	θ_2
3	$\frac{\pi}{2}$	a_2	d_3	0

   Determining ${}^0_1T$,${}^1_2T$ and ${}^2_3T$ is now a simple matter of substituting these values into Equation 3.6, or, even simpler, using the Mathematica function from Problem 1.

```
<<</home/bill/courses/me469/math/forward.m
T[0,0,0,t1] . T[Pi/2,0,0,t2] . T[Pi/2,a2,d3,0] //Simplify
```

   produces the mess

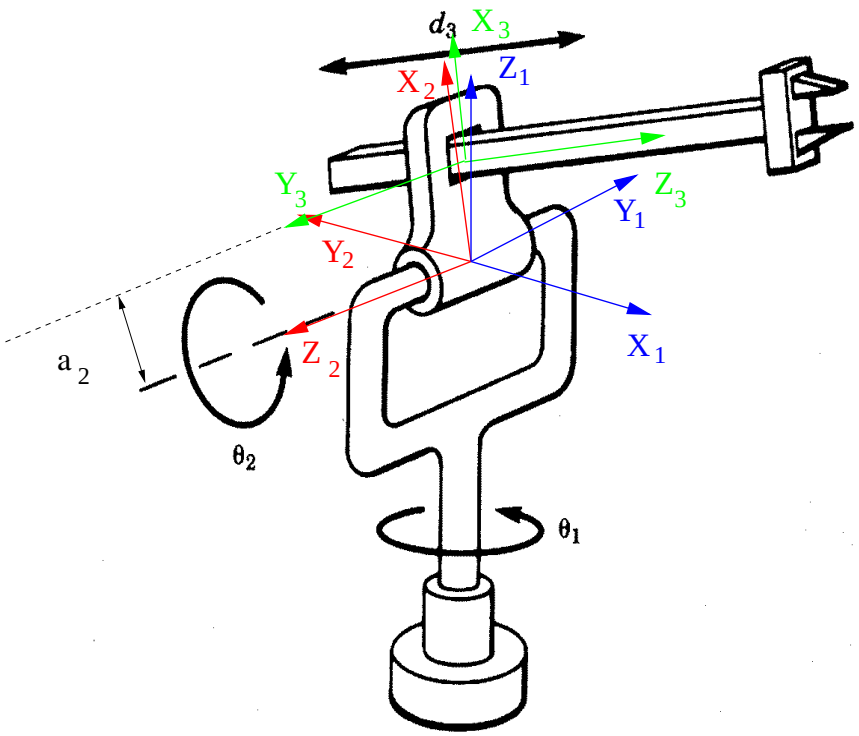

Figure 2. Frames for problem 4.

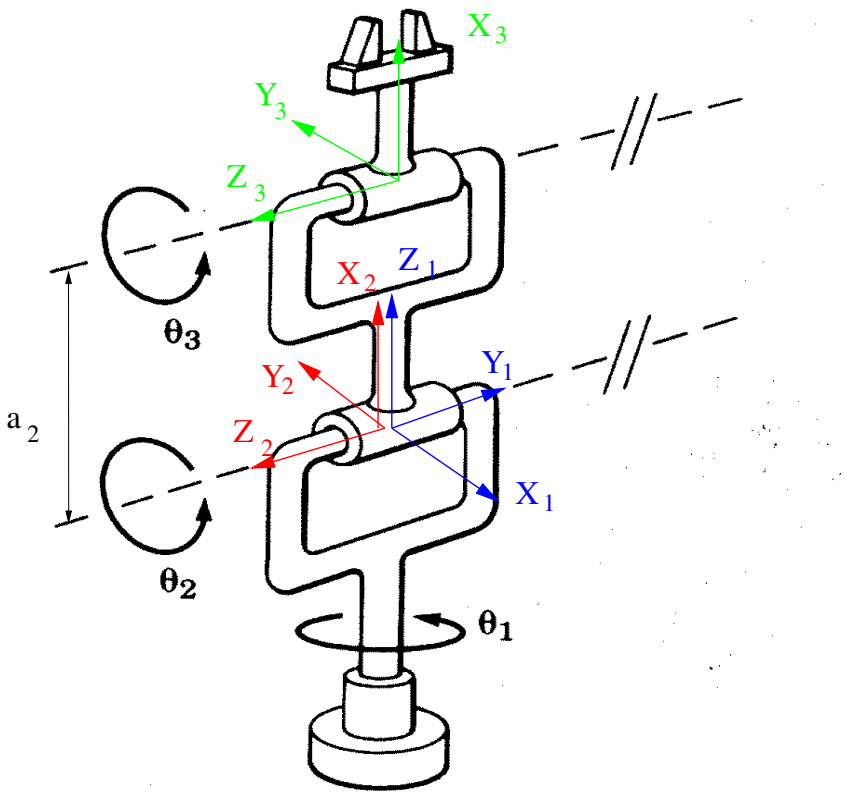

Figure 3. Frames for problem 5.

```
{{Cos[t1] Cos[t2],Sin[t1],Cos[t1] Sin[t2],Cos[t1] (a2 Cos[t2]+d3 Sin[t2])},{
    Cos[t2] Sin[t1],-Cos[t1],Sin[t1] Sin[t2],
    Sin[t1] (a2 Cos[t2]+d3 Sin[t2])},{Sin[t2],
    0,-Cos[t2],-d3 Cos[t2]+a2 Sin[t2]},{0,0,0,1}}
```

or

$$ {}^{3}_{0}T = \begin{bmatrix} \cos(\theta_1)\,\cos(\theta_2) & \sin(\theta_1) & \cos(\theta_1)\,\sin(\theta_2) & \cos(\theta_1)\,(a_2\,\cos(\theta_2) + d_3\,\sin(\theta_2)) \\ \cos(\theta_2)\,\sin(\theta_1) & -\cos(\theta_1) & \sin(\theta_1)\,\sin(\theta_2) & \sin(\theta_1)\,(a_2\,\cos(\theta_2) + d_3\,\sin(\theta_2)) \\ \sin(\theta_2) & 0 & -\cos(\theta_2) & -(d_3\,\cos(\theta_2)) + a_2\,\sin(\theta_2) \\ 0 & 0 & 0 & 1 \end{bmatrix}. $$

5. (Craig, 3.18)
   Following the usual rules for affixing frames to manipulators results in the frames illustrated in Figure 3.

Consulting the figure, and naming the distance a_2, the following link parameters are apparent:

i	α_{i-1}	a_{i-1}	d_i	θ_i
1	0	0	0	θ_1
2	$\frac{\pi}{2}$	0	0	θ_2
3	0	a_2	0	θ_3

Determining ${}^0_1T$,${}^1_2T$ and ${}^2_3T$ is now a simple matter of substituting these values into Equation 3.6, or, even simpler, using the Mathematica function from Problem 1.

```
<<</home/bill/courses/me469/math/forward.m
T[0,0,0,t1] . T[Pi/2,0,0,t2] . T[0,a2,0,t3] //Simplify
```

gives

$$
{}^3_0T = \begin{bmatrix} \cos(\theta_1)\,\cos(\theta_2+\theta_3) & -(\cos(\theta_1)\,\sin(\theta_2+\theta_3)) & \sin(\theta_1) & a_2\cos(\theta_1)\,\cos(\theta_2) \\ \cos(\theta_2+\theta_3)\,\sin(\theta_1) & -(\sin(\theta_1)\,\sin(\theta_2+\theta_3)) & -\cos(\theta_1) & a_2\cos(\theta_2)\,\sin(\theta_1) \\ \sin(\theta_2+\theta_3) & \cos(\theta_2+\theta_3) & 0 & a_2\sin(\theta_2) \\ 0 & 0 & 0 & 1 \end{bmatrix}.
$$

6. (Craig, 3.19)

For this problem, take the zero position of the links as follows:

- for link 2, let $d_2 = 0$ when the link is all the way "down" and
- for link 3, let $d_3 = 0$ when the wrist is flush against the joint stop, *i.e.*, all the way to the left.

The link frame assignments are illustrated in Figure 4.

Consulting the figure and naming the distance a_2, the following link parameters are apparent:

i	α_{i-1}	a_{i-1}	d_i	θ_i
1	0	0	0	θ_1
2	0	0	$a_1 + d_2$	$\frac{\pi}{2}$
3	$\frac{\pi}{2}$	a_2	$d_3 + a_3$	0

Plugging into Equation 3.6, or the mathematica function gives the forward kinematics

$$
{}^0_3T = \begin{bmatrix} -\sin\theta_1 & 0 & \cos\theta_1 & (d_3+a_3)\cos\theta_1 - a_2\sin\theta_1 \\ \cos\theta_1 & 0 & \sin\theta_1 & a_2\cos\theta_1 + (d_3+a_3)\sin\theta_1 \\ 0 & 1 & 0 & a_1+d_2 \\ 0 & 0 & 0 & 1 \end{bmatrix}
$$

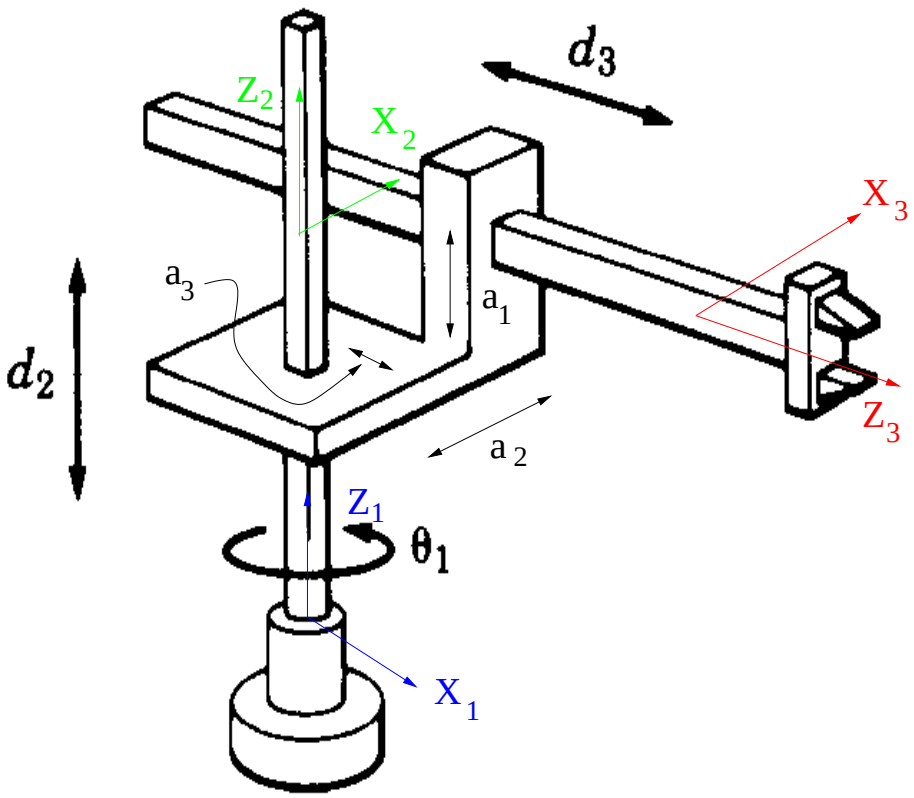

Figure 4. Link frame assignments for problem 6.

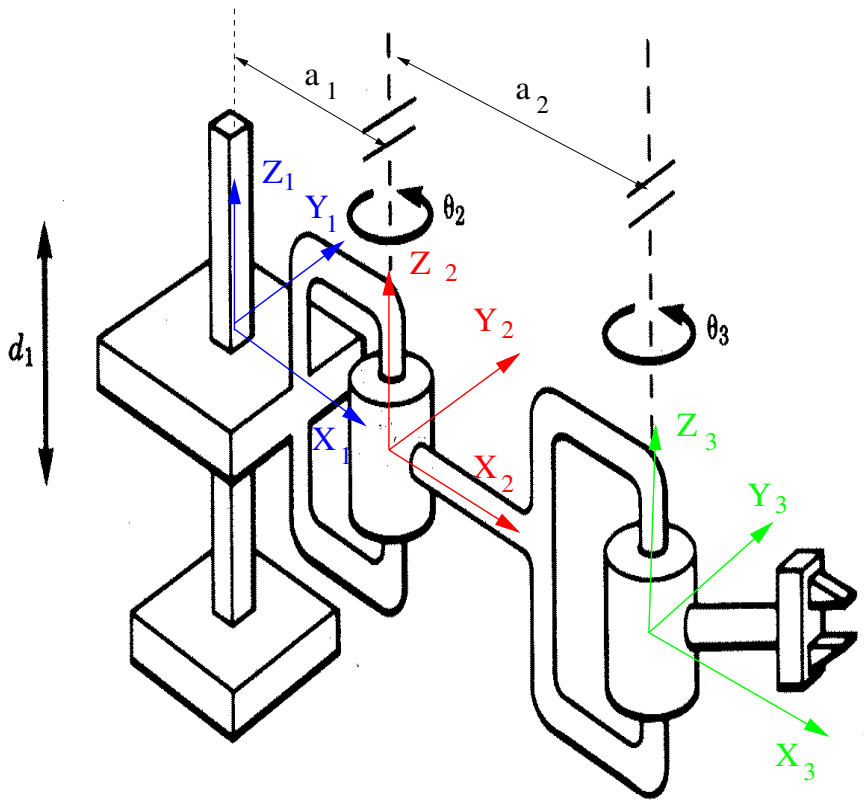

Figure 5. Frames for problem 7.

7. (Craig, 3.20)
Following the usual rules for affixing frames to manipulators results in the frames illustrated in Figure 5.

Consulting the figure, and naming the distances a_1 and a_2, the following link parameters are apparent:

i	α_{i-1}	a_{i-1}	d_i	θ_i
1	0	0	d_1	0
2	0	a_1	0	θ_2
3	0	a_2	0	θ_3

Determining ${}^0_1T$,${}^1_2T$ and ${}^2_3T$ is now a simple matter of substituting these values into Equation 3.6, or, even simpler, using the Mathematica function from Problem 1.

```
<<</home/bill/courses/me469/math/forward.m
T[0,0,d1,0] . T[0,a1,0,t2] . T[0,a2,0,t3] //Simplify
```

gives

$$ {}^3_0T = \begin{bmatrix} \cos(\theta_2+\theta_3) & -\sin(\theta_2+\theta_3) & 0 & a_1+\cos(\theta_2)\,a_2 \\ \sin(\theta_2+\theta_3) & \cos(\theta_2+\theta_3) & 0 & \sin(\theta_2)\,a_2 \\ 0 & 0 & 1 & d_1 \\ 0 & 0 & 0 & 1 \end{bmatrix}. $$