University of Notre Dame
Aerospace and Mechanical Engineering

AME 469: Introduction to Robotics
Homework 6 Solutions

B. Goodwine
Spring, 2001

1. (Craig, 5.18)
   This is just asking for the linear part, so all we have to do is differentiate the top three terms of the fourth column:

$$ {}^0P_{3ORG} = \begin{bmatrix} l_1c_1 + l_2c_1c_2 \\ l_1s_1 + l_2s_1c_2 \\ l_2s_2 \end{bmatrix}, $$

   therefore

$$ {}^0\dot{P}_{3ORG} = \begin{bmatrix} -\dot{\theta}_1(l_1s_1 + l_2s_1c_2) - \dot{\theta}_2l_2c_1s_2 \\ \dot{\theta}_1(l_1c_1 + l_2c_1c_2) - \dot{\theta}_2l_2s_1s_2 \\ \dot{\theta}_2l_2c_2 \end{bmatrix}, $$

   or, in matrix form,

$$ \boxed{ {}^0J(\Theta) = \begin{bmatrix} -l1s_1 - l_2s_1c_2 & -l_2c_1s_2 & 0 \\ l_1c_1 + l_2c_1c_2 & -l_2s_1s_2 & 0 \\ 0 & l_2c_2 & 0 \end{bmatrix}. } $$

2. (Craig, 5.19)
   Using the general definition of a Jacobian directly gives:

$$ J(\Theta) = \begin{bmatrix} -a_1s_1 - d_2c_1 & -s_1 \\ a_1c_1 - d_2s_1 & c_1 \end{bmatrix}. $$

   Now,

$$ \det\left(J(\Theta)\right) = -d_2. $$

   Therefore, the manipulator is at a singular configuration when

$$ d_2 = 0. $$

3. (a) You can do this problem in two ways. The first way is attaching frames to each link and determining the Denavit–Hartenberg parameters, as illustrated in Figure 1.

Referring to the figure, the link parameters are:

i	α_{i-1}	a_{i-1}	d_i	θ_i
1	0	0	0	θ_1
2	0	l_1	0	θ_2
3	0	l_2	0	θ_3

Using equation 3.6 or your Mathematica function, gives the transformation

$$ {}^0_3T = \begin{bmatrix} \cos(\theta_1+\theta_2+\theta_3) & -\sin(\theta_1+\theta_2+\theta_3) & 0 & \cos(\theta_1)\,l_1+\cos(\theta_1+\theta_2)\,l_2 \\ \sin(\theta_1+\theta_2+\theta_3) & \cos(\theta_1+\theta_2+\theta_3) & 0 & \sin(\theta_1)\,l_1+\sin(\theta_1+\theta_2)\,l_2 \\ 0 & 0 & 1 & 0 \\ 0 & 0 & 0 & 1 \end{bmatrix} $$

Note that frame 0 is the same as frame S; however, the tool frame T is *not* frame 3. To get the overall transformation ${}^S_TT$, we need to multiply ${}^0_3T$ by ${}^3_TT$, which is pure displacement in the x–direction:

$$ {}^3_TT = \begin{bmatrix} 1 & 0 & 0 & l_3 \\ 0 & 1 & 0 & 0 \\ 0 & 0 & 1 & 0 \\ 0 & 0 & 0 & 1 \end{bmatrix}. $$

Evaluating the matrix product gives

$$ {}^S_TT = \begin{bmatrix} \cos(\theta_1+\theta_2+\theta_3) & -\sin(\theta_1+\theta_2+\theta_3) & 0 & \cos(\theta_1)\,l_1+\cos(\theta_1+\theta_2)\,l_2+\cos(\theta_1+\theta_2+\theta_3)\,l_3 \\ \sin(\theta_1+\theta_2+\theta_3) & \cos(\theta_1+\theta_2+\theta_3) & 0 & \sin(\theta_1)\,l_1+\sin(\theta_1+\theta_2)\,l_2+\sin(\theta_1+\theta_2+\theta_3)\,l_3 \\ 0 & 0 & 1 & 0 \\ 0 & 0 & 0 & 1 \end{bmatrix}. \tag{1} $$

The (x, y) displacement of the end effector (the origin of the tool frame) is given by the upper two terms of the last column, and inspecting the rotation matrix component of T (the upper left 3×3 part, shows that the orientation is a pure rotation about the z–axis by an amount $\theta_1 + \theta_2 + \theta_3$. Clearly, this is what should be expected, since it is a planar problem, which restricts rotation to be purely about the z–axis.

The easier way to do the problem is to take the (x, y) forward kinematics that I gave in class, and realize that the rotational part must be $\theta_1 + \theta_2 + \theta_3$ about the z–axis.

(b) Since this is a planar problem, we will restrict our attention to the (x, y) displacement variables, and rotation about the z–axis only. Looking at the forward kinematics, Equation 1, we see that

$$ \begin{aligned} x &= l_1\cos\theta_1 + l_2\cos(\theta_1+\theta_2) + l_3\cos(\theta_1+\theta_2+\theta_3) \\ y &= l_1\sin\theta_1 + l_2\sin(\theta_1+\theta_2) + l_3\sin(\theta_1+\theta_2+\theta_3) \end{aligned} $$

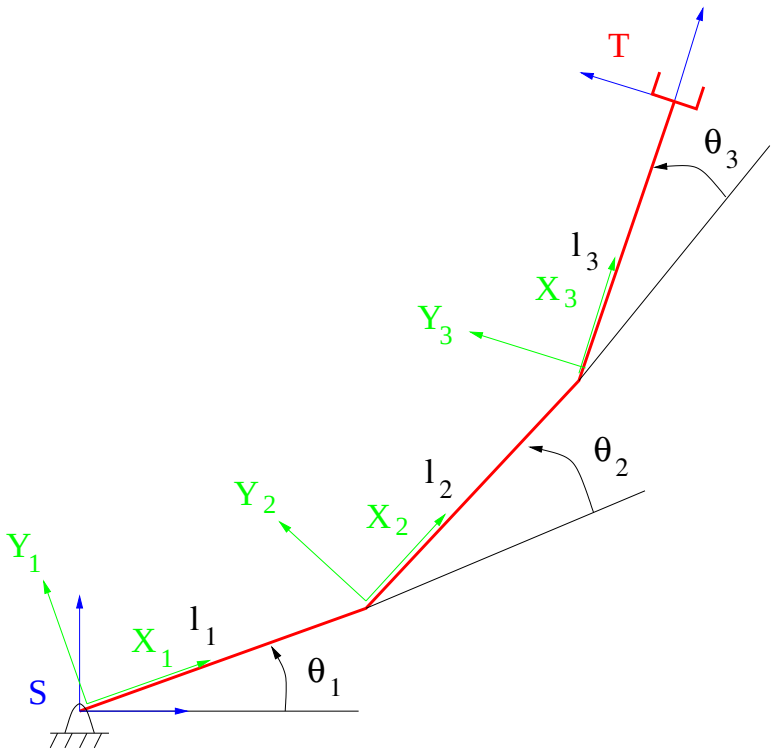

Figure 1. Mechanism for Problem 3.

and the amount of rotation about the z axis is $\theta_1 + \theta_2 + \theta_3$.
Differentiating gives

$$\begin{aligned}
\dot{x} &= -l_1\dot{\theta}_1 \sin\theta_1 - l_2(\dot{\theta}_1 + \dot{\theta}_2)\sin(\theta_1+\theta_2) - l_3(\dot{\theta}_1 + \dot{\theta}_2 + \dot{\theta}_3)\sin(\theta_1+\theta_2+\theta_3) \\
\dot{y} &= l_1\dot{\theta}_1 \cos\theta_1 + l_2(\dot{\theta}_1 + \dot{\theta}_2)\cos(\theta_1+\theta_2) + l_3(\dot{\theta}_1 + \dot{\theta}_2 + \dot{\theta}_3)\cos(\theta_1+\theta_2+\theta_3) \\
\omega_z &= \dot{\theta}_1 + \dot{\theta}_2 + \dot{\theta}_3
\end{aligned}$$

Writing this as a matrix product gives:

$$\begin{bmatrix} \dot{x} \\ \dot{y} \\ \omega_z \end{bmatrix} = J \begin{bmatrix} \dot{\theta}_1 \\ \dot{\theta}_2 \\ \dot{\theta}_3 \end{bmatrix},$$

Where

$$J = \begin{bmatrix} -l_1\sin\theta_1 - l_2\sin(\theta_1+\theta_2) - l_3\sin(\theta_1+\theta_2+\theta_3) & -l_2\sin(\theta_1+\theta_2) - l_3\sin(\theta_1+\theta_2+\theta_3) & -l_3\sin(\theta_1+\theta_2+\theta_3) \\ l_1\cos\theta_1 + l_2\cos(\theta_1+\theta_2) + l_3\cos(\theta_1+\theta_2+\theta_3) & l_2\cos(\theta_1+\theta_2) + l_3\cos(\theta_1+\theta_2+\theta_3) & l_3\cos(\theta_1+\theta_2+\theta_3) \\ 1 & 1 & 1 \end{bmatrix}.$$

(c) Since the Jacobian is 4×4, we can use the determinant to determine where it drops rank. A hand, or Mathematica computation shows that

$$\det J = l_1 l_2 \sin\theta_2,$$

so the manipulator is singular whenever

$$\theta_2 = k\pi, \qquad k = 1, 2, , \ldots.$$

(d) The Mathematica code to implement the animation can be found on the course web page: `http://controls.ame.nd.edu/me469/hw4-1d.ps`

4. (a) Figure 2 shows the manipulator with the link frame assignments determined in Homework 2, with a tool frame added at the end effector. The relationship between the tool frame and frame 3 is a pure displacement in the x direction, *i.e.*,

$${}^{T}_{3}T = \begin{bmatrix} 1 & 0 & 0 & a_3 \\ 0 & 1 & 0 & 0 \\ 0 & 0 & 1 & 0 \\ 0 & 0 & 0 & 1 \end{bmatrix}.$$

Multiplying ${}^{3}_{0}T$ from Homework 2 and this gives

$${}^{T}_{0}T = {}^{3}_{0}T\,{}^{T}_{3}T = \begin{bmatrix} \cos(\theta_1)\,\cos(\theta_2+\theta_3) & -(\cos(\theta_1)\,\sin(\theta_2+\theta_3)) & \sin(\theta_1) & \cos(\theta_1)\,(a_2\,\cos(\theta_2) + a_3\cos(\theta_2+\theta_3)) \\ \cos(\theta_2+\theta_3)\,\sin(\theta_1) & -(\sin(\theta_1)\,\sin(\theta_2+\theta_3)) & -\cos(\theta_1) & (a_2\,\cos(\theta_2) + a_3\cos(\theta_2+\theta_3))\,\sin(\theta_1) \\ \sin(\theta_2+\theta_3) & \cos(\theta_2+\theta_3) & 0 & a_2\sin(\theta_2) + a_3\,\sin(\theta_2+\theta_3) \\ 0 & 0 & 0 & 1 \end{bmatrix}$$

(Recall that the direction for the x axis for frame 3 is arbitrary. Therefore, you could have correctly put the x_3 axis in a different orientation. In such a case, the above reasoning would be the same, but the pure displacement would not necessarily be in the x direction.)

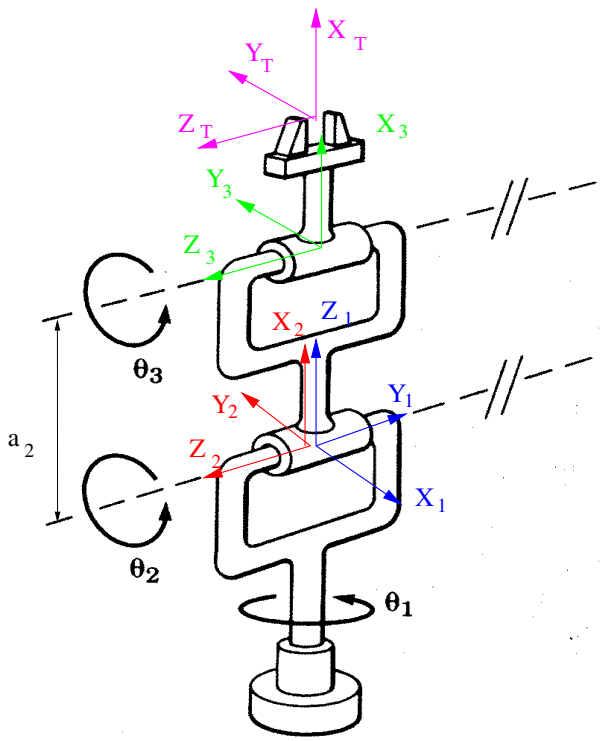

Figure 2. Frames for Problem 4.

Since we are only concerned with the (x, y, z) location of the end effector, the Jacobian can be determined by differentiating the displacement term of ${}^{T}_{0}T$, (the top three terms of the last column). Let's denote this vector by

$$p = \begin{bmatrix} p_x \\ p_y \\ p_z \end{bmatrix}.$$

Then the Jacobian is

$$\begin{aligned} J &= \begin{bmatrix} \frac{\partial p_x}{\theta_1} & \frac{\partial p_x}{\theta_2} & \frac{\partial p_x}{\theta_3} \\ \frac{\partial p_y}{\theta_1} & \frac{\partial p_y}{\theta_2} & \frac{\partial p_y}{\theta_2} \\ \frac{\partial p_z}{\theta_1} & \frac{\partial p_z}{\theta_2} & \frac{\partial p_z}{\theta_3} \end{bmatrix} \\ &= \begin{bmatrix} -((a_2\cos(\theta_2) + a_3\cos(\theta_2+\theta_3))\sin(\theta_1)) & -(\cos(\theta_1)\,(a_2\sin(\theta_2) + a_3\sin(\theta_2+\theta_3))) & -(a_3\cos(\theta_1)\sin(\theta_2+\theta_3)) \\ \cos(\theta_1)\,(a_2\cos(\theta_2) + a_3\cos(\theta_2+\theta_3)) & -(\sin(\theta_1)\,(a_2\sin(\theta_2) + a_3\sin(\theta_2+\theta_3))) & -(a_3\sin(\theta_1)\sin(\theta_2+\theta_3)) \\ 0 & a_2\cos(\theta_2) + a_3\cos(\theta_2+\theta_3) & a_3\cos(\theta_2+\theta_3) \end{bmatrix}. \end{aligned}$$

(b) A quick mental calculation shows that

$$\det(J) = -\left(a_2 a_3\left(a_2\cos\theta_2 + a_3\cos(\theta_2+\theta_3)\right)\sin(\theta_3)\right).$$

Therefore, the mechanism is singular if $\theta_3 = 0$.

5. (a) Figure 3 shows the manipulator with the link frame assignments determined in Homework 2, with a tool frame added at the end effector. For simplicity, assume that the final joint is "straight," , *i.e.*, it is aligned with the frames so that the relationship between the tool frame and frame 3 is a pure displacement in the x direction, *i.e.*,

$${}^{T}_{3}T = \begin{bmatrix} 1 & 0 & 0 & a_3 \\ 0 & 1 & 0 & 0 \\ 0 & 0 & 1 & 0 \\ 0 & 0 & 0 & 1 \end{bmatrix}.$$

Multiplying ${}^{3}_{0}T$ from Homework 2 and this gives

$${}^{T}_{0}T = {}^{3}_{0}T\,{}^{T}_{3}T = \begin{bmatrix} \cos(\theta_2+\theta_3) & -\sin(\theta_2+\theta_3) & 0 & a_1 + \cos(\theta_2)\,a_2 + \cos(\theta_2+\theta_3)\,a_3 \\ \sin(\theta_2+\theta_3) & \cos(\theta_2+\theta_3) & 0 & \sin(\theta_2)\,a_2 + \sin(\theta_2+\theta_3)\,a_3 \\ 0 & 0 & 1 & d_1 \\ 0 & 0 & 0 & 1 \end{bmatrix}$$

(Recall that the direction for the x axis for frame 3 is arbitrary. Therefore, you could have correctly put the x_3 axis in a different orientation. In such a case, the above reasoning would be the same, but the pure displacement would not necessarily be in the x direction.)

Since we are only concerned with the (x, y, z) location of the end effector, the Jacobian can be determined by differentiating the displacement term of ${}^{T}_{0}T$, (the top three terms of the last column). Let's denote this vector by

$$p = \begin{bmatrix} p_x \\ p_y \\ p_z \end{bmatrix}.$$

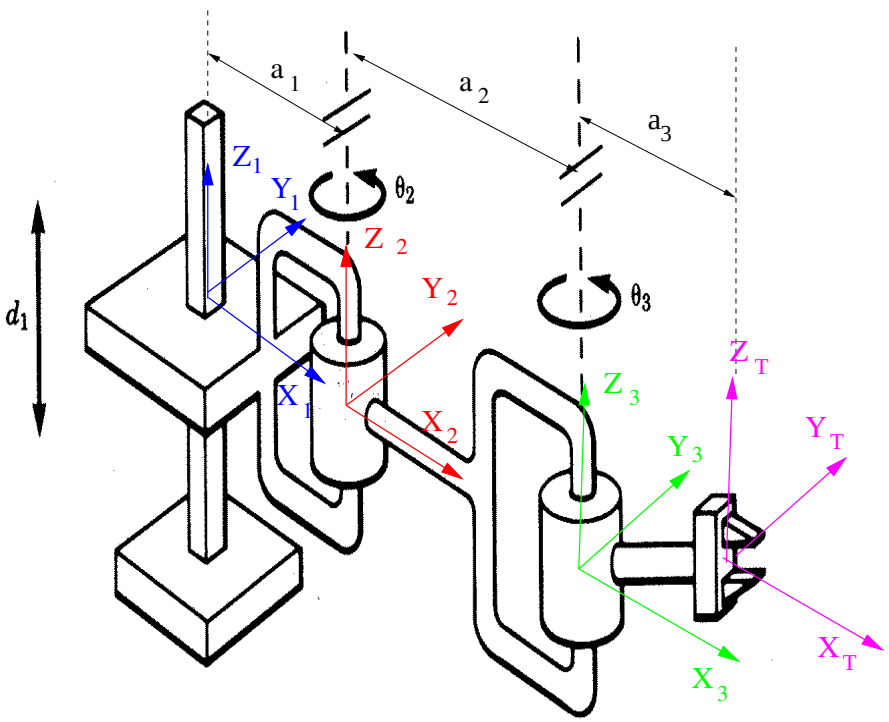

Figure 3. Frames for Problem 5.

Then the Jacobian is

$$
\begin{aligned}
J &= \begin{bmatrix} \frac{\partial p_x}{d_1} & \frac{\partial p_x}{\theta_2} & \frac{\partial p_x}{\theta_3} \\ \frac{\partial p_y}{d_1} & \frac{\partial p_y}{\theta_2} & \frac{\partial p_y}{\theta_2} \\ \frac{\partial p_z}{d_1} & \frac{\partial p_z}{\theta_2} & \frac{\partial p_z}{\theta_3} \end{bmatrix} \\
&= \begin{bmatrix} 0 & -(a_2 \sin(\theta_2)) - a_3 \sin(\theta_2 + \theta_3) & -(a_3 \sin(\theta_2 + \theta_3)) \\ 0 & a_2 \cos(\theta_2) + a_3 \cos(\theta_2 + \theta_3) & a_3 \cos(\theta_2 + \theta_3) \\ 1 & 0 & 0 \end{bmatrix}.
\end{aligned}
$$

(b) A quick mental calculation shows that

$$\det(J) = a_2 a_2 \sin\theta_3.$$

Therefore, the mechanism is singular if $\theta_3 = 0$.

6. (a) Figure 4 shows the manipulator with the link frame assignments determined in Homework 3, with a tool frame added at the end effector. The relationship between the tool frame and frame 3 is a pure displacement in the $-y$ direction, *i.e.*,

$$ {}^T_3T = \begin{bmatrix} 1 & 0 & 0 & 0 \\ 0 & 1 & 0 & -a \\ 0 & 0 & 1 & 0 \\ 0 & 0 & 0 & 1 \end{bmatrix}. $$

Multiplying ${}^3_0T$ from Homework 3 and this gives

$$ {}^T_0T = {}^3_0T\,{}^T_3T = \begin{bmatrix} 0 & 0 & 1 & d_3 \\ 0 & -1 & 0 & d_2 \\ 1 & 0 & 0 & a + d_1 \\ 0 & 0 & 0 & 1 \end{bmatrix} $$

(Recall that the direction for the x axis for frame 3 is arbitrary. Therefore, you could have correctly put the x_3 axis in a different orientation. In such a case, the above reasoning would be the same, but the pure displacement would not necessarily be in the x direction.) Since we are only concerned with the (x, y, z) location of the end effector, the Jacobian can be determined by differentiating the displacement term of ${}^T_0T$, (the top three terms of the last column). Let's denote this vector by

$$ p = \begin{bmatrix} p_x \\ p_y \\ p_z \end{bmatrix}. $$

Then the Jacobian is

$$
\begin{aligned}
J &= \begin{bmatrix} \frac{\partial p_x}{d_1} & \frac{\partial p_x}{d_2} & \frac{\partial p_x}{d_3} \\ \frac{\partial p_y}{d_1} & \frac{\partial p_y}{d_2} & \frac{\partial p_y}{d_2} \\ \frac{\partial p_z}{d_1} & \frac{\partial p_z}{d_2} & \frac{\partial p_z}{d_3} \end{bmatrix} \\
&= \begin{bmatrix} 0 & 0 & 1 & d_3 \\ 0 & -1 & 0 & d_2 \\ 1 & 0 & 0 & a + d_1 \\ 0 & 0 & 0 & 1 \end{bmatrix}.
\end{aligned}
$$

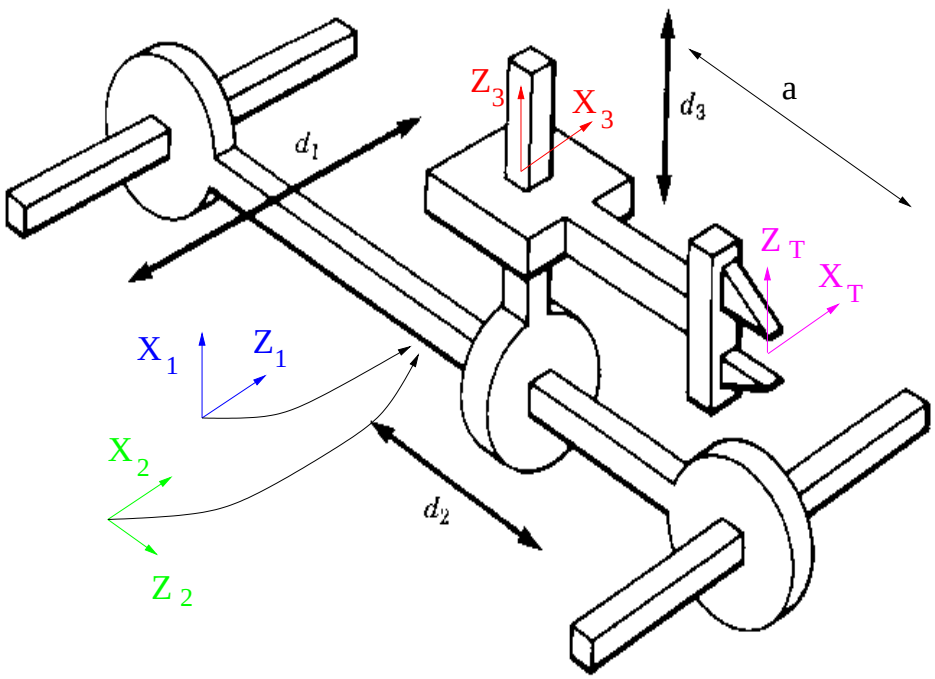

Figure 4. Frames for Problem 6.

This matrix is *never* singular, and so the mechanism has *no singularities.*

This should be clear to you by inspcetion; however, if it is not clear to you, compute the determinant and you will see that it is never zero, regardless of the values of the d_i.